VictorTaichung

www.tuv.com TÜVRheinland ID:0091003197

Vcenter - 205

Pendulum Machining

High Versatility

- ***Long Fixed Table accommodates heavier loads and long parts.***
- ***Traveling Column provides excellent access to work area.***
- ***Easy installation for rotary tables or hydraulic fixtures.***

High Productivity

- ***Rapid feed X/Y/Z-30/30/30 m/min reduces spindle idle time.***
- ***Directly Coupled Spindle avoids belt vibration for better finish.***
- ***Central Partition enables higher production than VMC with 2-pallet APC.***

Victor Taichung – an established ISO 9001 & 14001 company

Highest Productivity And

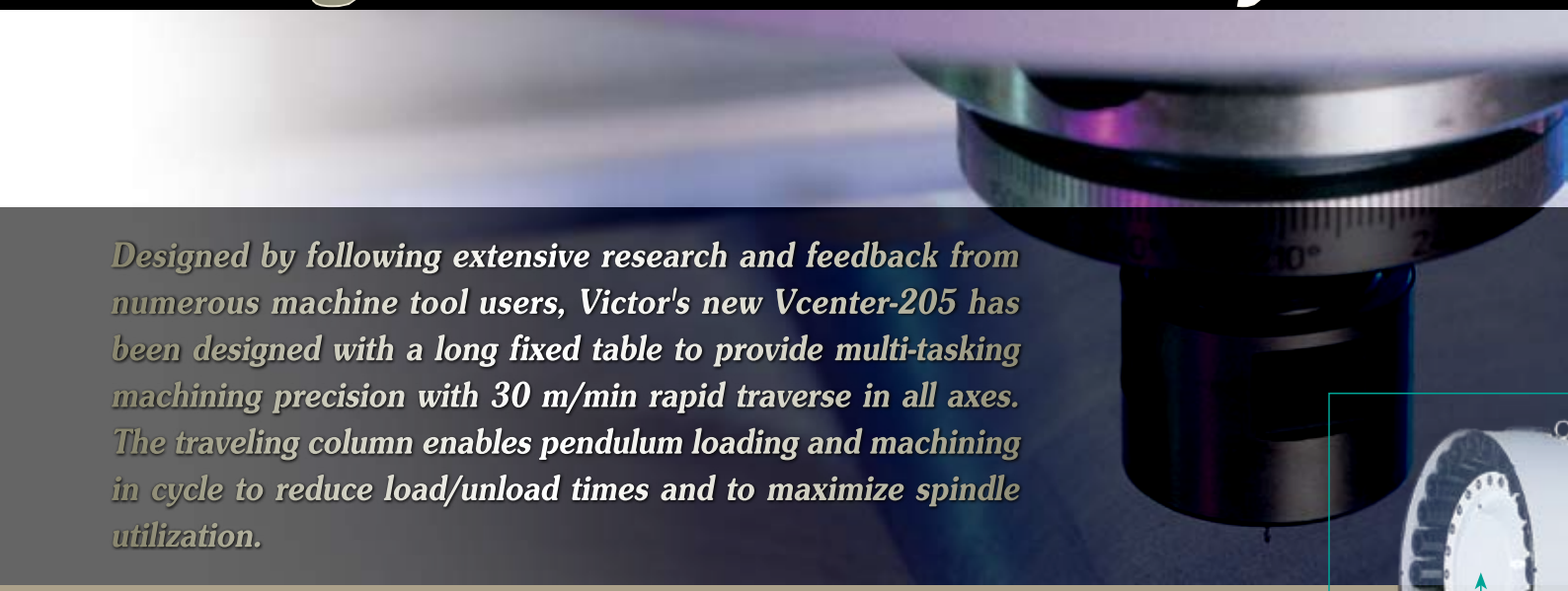

Designed by following extensive research and feedback from numerous machine tool users, Victor's new Vcenter-205 has been designed with a long fixed table to provide multi-tasking machining precision with 30 m/min rapid traverse in all axes. The traveling column enables pendulum loading and machining in cycle to reduce load/unload times and to maximize spindle utilization.

Directly-coupled Spindle (DCS) with high torque spindle motor

- Spindle motor is directly coupled to the spindle to avoid the vibration resulted from belts and enhance surface finish on components.
- 12000 rpm spindle speed with dual winding for high torque output implements high speed machining at high feed rate.
- Oil-air lubrication with filtration system is used for spindle bearing.
- Air curtain has been added to constantly give the spindle an extra coat of protection.

Spindle oil cooler (Optional)

- While the spindle structure is built for the maximum rigidity, the spindle oil cooler can be installed optional to ensure the long bearing life.
- Cooling oil circulates around the spindle cartridge constantly to maintain the low temperature during the spindle rotation.

High rigidity dynamic structure

- Heavy-duty Meehanite® castings from Victor's licensed Meehanite foundry are used in the bed and column for maximum damping and strength.
- One piece bed castings with a heavily ribbed column minimizes machine distortion.
- CAE (computer aided engineering) design results in a maximum stiffness to ensure the minimum overhang distortion for all Y-axis traveling range 550 mm.

Column-mounted tool magazine and arm type ATC

- Tool magazine moving with column reduces the tool exchange time and ensures tools and kept out of machining area and free of swarf.
- Two arm type ATC offers quick tool changeover time and optimal reliability.
- BT-40 tooling with updated pull stud JIS-40P upgrades the cutting capability than conventional BT-40 tooling.

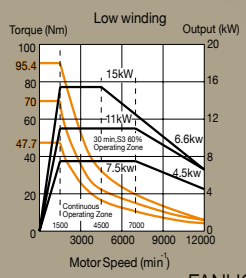

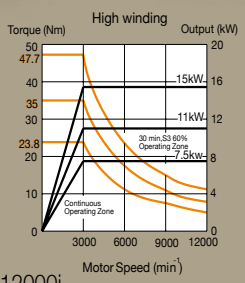

FANUCαT8/12000i

Reliability

VICTOR-TAICHUNG

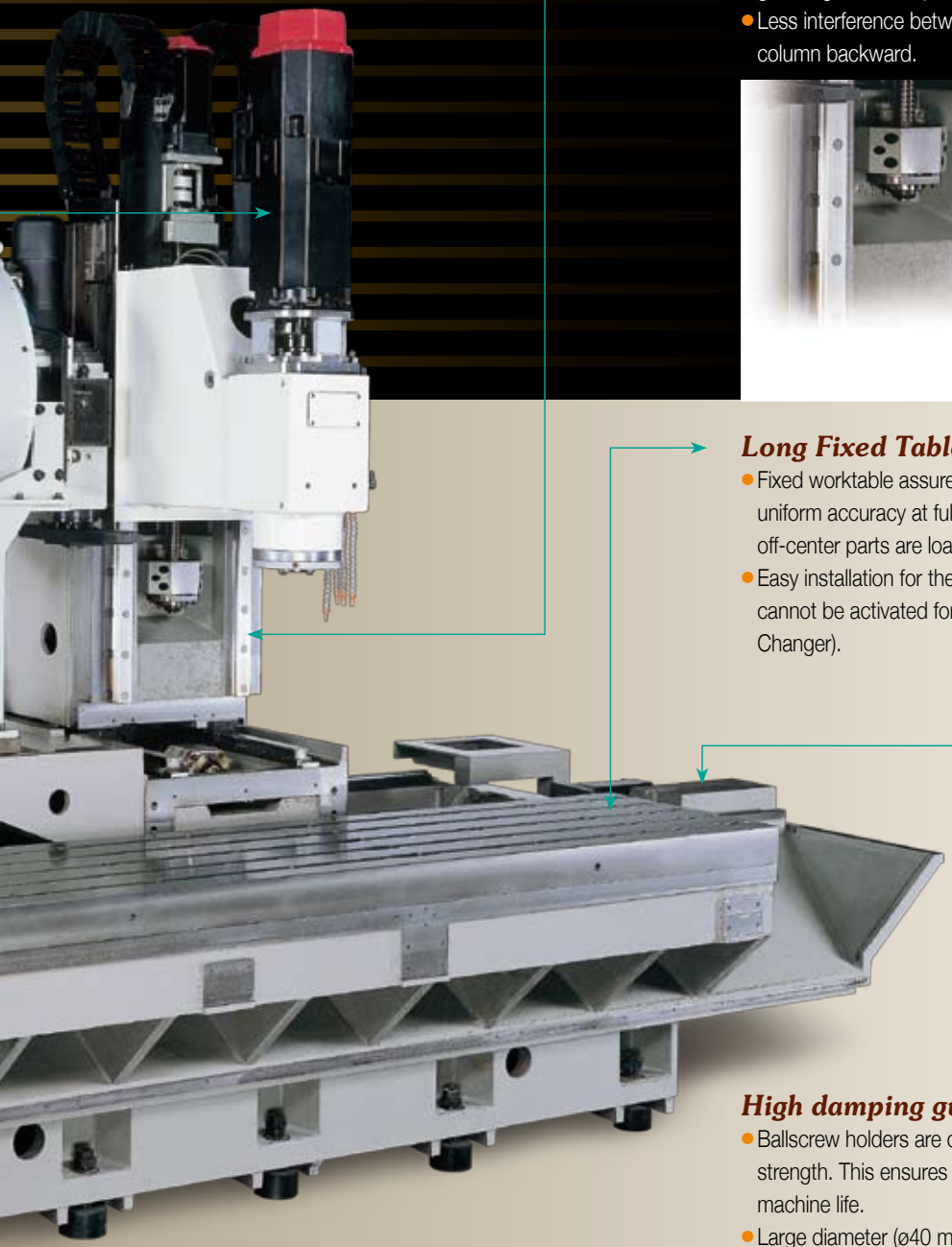

Traveling Column with 30 m/min rapid feed

- C-framed traveling column features easy access to load/unload the components.
- Rapid feed rate 30/30/30 m/min for 3 axes with scissor type telescopic guarding reduces spindle idle time with reliable quality guaranteed.
- Less interference between tool magazine and working area by moving the column backward.

Long Fixed Table

- Fixed worktable assures the evenly distributed loading and features for uniform accuracy at full stroke of X-axis travel even when oversized parts of off-center parts are loaded.
- Easy installation for the 4th axis rotary tables or hydraulic fixtures which cannot be activated for conventional VMC with 2 pallet APC (Auto Pallet Changer).

High damping guide ways with high stiffness

- Ballscrew holders are cast into the machine for even more rigidity and strength. This ensures a constant support for the ballscrews over the entire machine life.
- Large diameter (ø40 mm) ball screws and big size linear guides (width 45 mm) with retainer (model SHS) ensure the high structure stiffness during machining.
- Direct coupled servo motors eliminate motor backlash and noise caused by misalignment.

Victor NC Package

- Fanuc 0i-M / 18i-M / 31i-M controls to meet various requirement for batch production or high speed machining.
- Heidenhain iTNC-530 controller with user-friendly conversational function to meet mold manufacturing requirement.

High Versatility Through A Wide Range Of Set-ups

With a central partition guarding installed, the Vcenter-205 can effectively be turned into two smaller vertical machining centers, machining on one side while loading or unloading parts on the other side.

Two-door design

Pendulum machining by Central Partition System

- With the central partition guarding installed, the spindle can effectively machine on one side while loading or unloading parts on the other side.
- X-axis travel limit is automatically set up by interlock when partition guarding installed, and the machining area are split into the right and left area.
- The interlock function assures safe setup for one side while machining is made in the other side.
- Central Partition System features higher productivity than that of vertical machining center equipped with a 2-pallet APC.

Easy installation for the 4th/5th axis tables and fixtures

- With a central partition guarding installed, the long table can be mounted with two fixtures or two CNC controlled tables.
- No complicated wiring and cabling involved as the conventional VMC with 2-pallet APC, the fixed table facilitates the ultimate reliability and much heavier loading on the tables.
- Rapid traverse speed 30 m/min by traveling column further offers much higher productivity than conventional VMC with 2-pallet APC.

Advantages of Long Fixed Table with Traveling Column

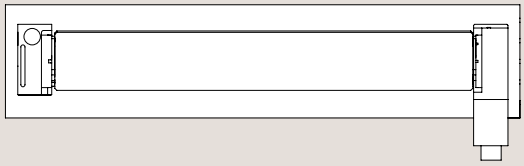

Full Table
with one part loaded

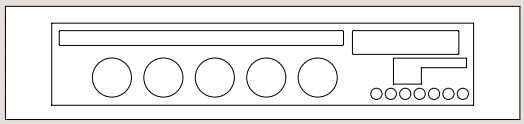

Full Table
with many parts loaded

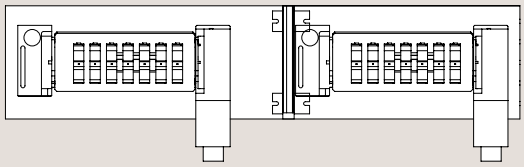

Split Table
with two identical parts loaded for two different operations

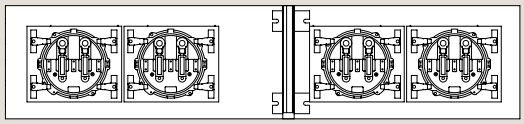

Split Table
with two identical set-ups for the same operations
(with or without rotary tables or fixtures)

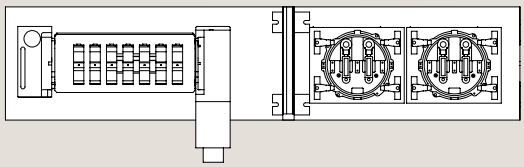

Split Table
with two different setups for two different operations.

Optimized design for part loading

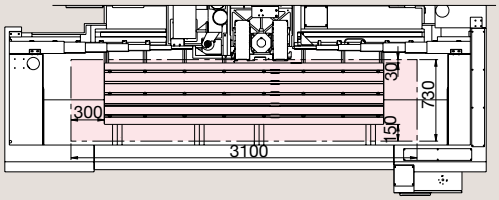

Loading from the top

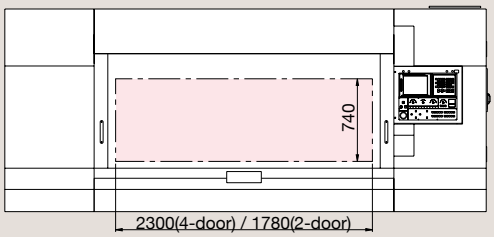

Loading from the front

Maximum machining range

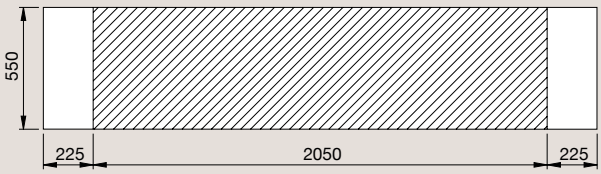

Partition guarding is removed

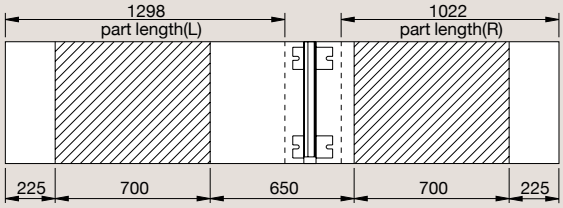

Partition guarding is installed

Options

32 or 40 tool magazine

Optional 32 (or 40) servo driven tool magazine enables pendulum machining on two spilt tables for different set-ups or two different applications.

Auto tool length measurement

To reduce tool set-up time, Victor offers two automatic tool length measuring systems:

- Simple tool length measurement

Metrol system T-20B is mostly used for tapping and drilling as the probe only measures the tool length.

- Advance tool length measurement

Renishaw system TS-27R offers further advancement with the probe capable of measuring both tool lengths and diameters. This system is ideal for batch production where tools need to be constantly changed or replaced.

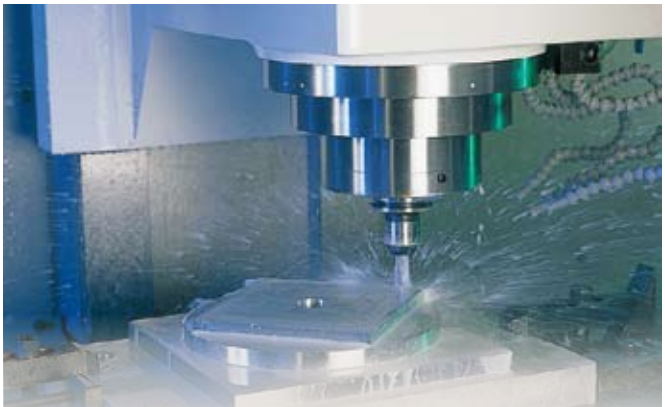

Coolant Through Spindle (CTS)

For improved deep hole drilling and boring capability, coolant can be forced through the center of the spindle under the high pressure (20 bars/60Hz by Grundfos pump CRK2-180) directly to the cutting area. To ensure long and reliable running of this system, fine particles produced during machining must be filtered out to prevent damage to the spindle. Victor's customized cleaning system by centrifugal dispersion or replaceable filter cores is far more reliable with less maintenance than conventional system to avoid the fine particles flowing into the spindle.

Stop block for oil hole coolant

As an alternative to CTS, it is possible to supply coolant through the tool holder by using an adaptor (stop block) located on the spindle nose. High pressure(coolants) can be supplied with no need for higher cost filter system as coolant bypassed the spindle.

Linear scales for improved repeatability

Linear scales offer exceptional positioning accuracy up to 0.005mm over full stroke. Only Heidenhain linear scales with a thermal behavior similar to that of the machine are selected to compensate for the thermal expansion and to enhance repeatability. Sealed encoders with durable Aluminum housing offer improved reliability and service life.

Coolant Options

Std. - coolant ring
Purpose - general

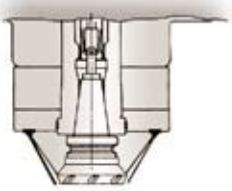

Opt. - directional pipe
Purpose - general

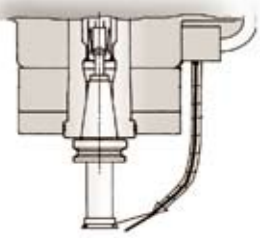

Opt. - oil hole coolant
Purpose - drilling, boring

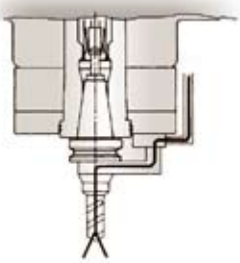

Opt. - thru. spindle coolant
Purpose - drilling, boring

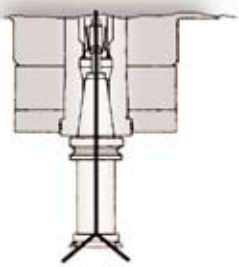

Opt. - oil mist
Purpose - tapping, reaming

4th/5th axis CNC rotary or tilting tables

Making the full use of the long fixed table feature, CNC rotary tables can be easily installed to improve the application range. Four axes simultaneous machining for multiple faces can be realized with a single set-up. The 5th axis table is also available with tilting as well as rotary function, FANUC 18i-MB5 or 31i control will be required for 5 axis simultaneous machining.

Workpiece measurement

o reduce time spent setting workpiece positions and then manually inspecting finished parts, automatic workpiece measurement is available with the use of Renishaw MP-10 or OMP-60 measuring probes. The workpiece position can be identified with the probe and work offsets automatically updated, enabling parts to be made right firs time. During batch production, in-process checking can be performed on the machine to maintain tight tolerance after rough machining.

Non-central Partition System

In case the central partition guarding is required to be located in different location for different setups, the partition guarding can also be re-located with the guarding options. However, two doors and the according moving stroke are unchanged to avoid any possibility for coolant leakage.

Higher power spindle

To meet heavier cutting requirement, the DCS spindle can be upgraded to higher power spindle motor or higher speed spindle.

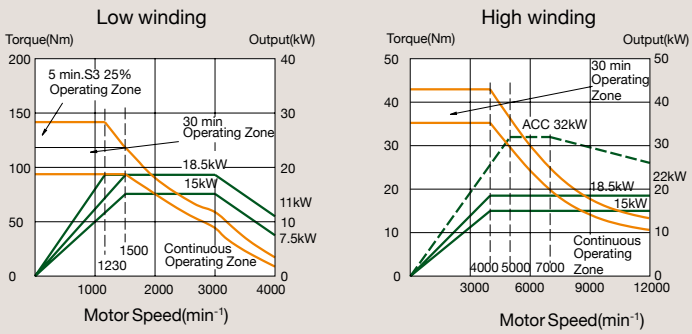

BT40 αL8/15000i

VICTOR Taichung's NC PACKAGE

Fanuc 0i-MD/18i-MB/31i-B controls

With 8.4" color display included as standard on Victor Taichung's Fanuc control package, Fanuc 0i-MD control is capable of addressing look-ahead up to 40 blocks to offer optimal reliability with the highest level of machine integration. With PLC developed in-house by highly experienced engineers, Vcenter-205 offers numerous safety features and maximizes the machine efficiency to meet the demands for most productions.

Through the option of 10.4" color display upgrade on the controller, Victor Taichung's Fanuc control package includes not only the conversational function MANUAL GUIDE I to reduce the programming time for easier operation, but control option AICC-2 capable of addressing look-ahead 200 blocks to shorten the cutting time for high speed machining. The control option Data Server board can be installed to extend the memory length for upgrading the data transfer rate. The machine controller can be upgraded to 31i-B control which is capable of addressing 600 blocks as standard and optionally 1000 blocks available by the so-called AICC-2 with HSP function (High Speed Processing) to further reduce the block addressing time for better surface finish.

VSS (Victor Software System) Macros

With exclusive software developed in-house by highly experienced engineers, VSS macros, which is included when the controller is upgraded with 10.4" monitor, enhance not only machine operation to reduce tool set-up time but also safety features to protect costly spindle. Productivity can be further increased when the adaptive controlled cutting is implemented.

Smart workpiece measurement

Adaptive cutting at constant loading

Air Bag (abnormal load monitoring)

Graphic tool management

Heidenhain iTNC-530 control

Powerful dialog programming (SmartNC®) with fully alphanumeric keyboard, Heidenhain control iTNC-530 are also available on Vcenter machines. Without remembering complicated G codes, sophisticated graphic functions with 15" TFT monitor make programming check easy. Heidenhain iTNC-530 is capable of addressing 256 blocks and further makes use of hard drive memory for advanced 4 or 5 axis simultaneous controls.

Control features for fast contour milling (Victor Taichung's standard)

Controller / Feature	Fanuc				Heidenhain
	0i-MD	32i-B	18i-MB	31i-B	iTNC-530 HSCI
Block addressing time	4 ms (opt. 2 ms by AICC-2)	2ms	2ms (Opt. 0.4ms)	0.4ms	0.5ms
Data storage	1280m (512kB) Opt. 5120m (2MB)	1280m (512kB) Opt. 5120m (2MB)	2560m (1MB) Opt. 5120m (2MB)	2560m (1MB) Opt. 10240m (8MB)	26GB (hard drive)
Data server (Memory extension)	Opt. (by CF Card)	Opt. (by CF card)	Std.	Std.	N.A.
Ethernet link	Std.	Std.	Std.	Std.	Std.
Preview Contouring (look ahead blocks)	40 (Opt. 200 by AICC-2)	200 (AICC-2)	180 (Opt. 600 by HPCC)	600 (Opt. 1000 by HSP)	256
Graphic display	8.4" (Opt. 10.4")	10.4"	10.4"	10.4"	15"
Conversational function	Opt. (Manual guide i +VSS Macros)	Manual guide i	Manual guide i	Manual guide i	Std. + SmartNC
Data transfer interface	PCMCIA port + USB	PCMCIA port + USB	PCMCIA port	PCMCIA port + USB	USB

Victor's Fanuc 0i-MD/18i-MB/31i-B Control Specifications

Standard:

ITEM	SPECIFICATION	DESCRIPTION
Controlled Axes:		
1.	Controlled Axes	3 Axes (X, Y, Z)
2.	Simultaneous Controlled Axes	Position / Linear Interpolation / Circular Interpolation (3 / 3 / 2)
3.	Least Input Increment	0.001 mm / 0.0001 inch / 0.001 deg.
4.	Least Input Increment 1/10	0.0001 mm / 0.00001 inch / 0.0001 deg.
5.	Max, Command Value	±99999.999 mm (±9999.9999 in)
6.	Fine Acceleration & Deceleration Control	Std.
7.	High Speed HRV Control	Std.
8.	Inch / Metric Conversion	Std. (G20 / G21)
9.	Interlock	All Axes / Each Axis / Cutting Block Start
10.	Machine Lock	All Axes / Each Axis
11.	Emergency Stop	Std.
12.	Over-Travel	Std.
13.	Stored Stroke Check 1 And Check 2	Std.
14.	Mirror Image	Each Axis
15.	Mirror Image M73, M74, M75, M76	X, Y Axes
16.	Follow-Up	Std.
17.	Position switch (with Victor's own PLC)	Std.
Operation:		
1.	Automatic Operation	Std.
2.	MDI Operation	MDI B
3.	DNC Operation	Reader / Puncher Interface Is Required
4.	DNC Operation With Memory Card	PCMCIA Card Attachment Is Required
5.	Program Number Search	Std.
6.	Sequence Number Search	Std.
7.	Sequence Number comparison and stop	Std.
8.	Buffer Register	Std.
9.	Dry Run	Std.
10.	Single Block	Std.
11.	Jog Feed	Std.
12.	Manual Reference Position Return	Std.
13.	Manual Handle Feed	1 Unit / Each Path
14.	Manual Handle Feed Rate	X1, X10, X100
15.	Z Axis Neglect	Std.
Interpolation:		
1.	Positioning	G00
2.	Single Direction Positioning	G60
3.	Exact Stop Mode	G61
4.	Exact Stop	G09
5.	Linear Interpolation	G01
6.	Circular Interpolation	G02, G03 (Multi-Quadrant Is Possible)
7.	Dwell	G04
8.	Polar coordinate interpolation	G12.1 (only available on 18i-M)
9.	Helical interpolation	Std.
10.	Skip Function	G31
11.	Reference Position Return	G28
12.	Reference Position Return Check	G27
13.	2nd / 3rd / 4th Reference Position Return	Std.
14.	Index Table Indexing	Std. (only available on HMC)
Feed:		
1.	Rapid Traverse Rate	Std.
2.	Rapid Traverse Override	F0, 25%, 50%, 100%
3.	Feed Per Minute	G94 (mm / min)
4.	Tangential Speed Constant Control	Std.
5.	Cutting Feed Rate Clamp	Std.
6.	Automatic Acceleration / Deceleration	Rapid Traverse: Linear; Cutting Feed: Exponential
7.	Rapid traverse Bell-shaped Acc. / Deceleration	Std. (G00)
8.	Bell-shaped Acc. / Deceleration Before & After Cutting Feed Interpolation	Std. (G01)
9.	Automatic Corner Deceleration	Std. (G64)
10.	Linear Acc / Deceleration Before & After Cutting Feed Interpolation	Std. (G01)
11.	Feed Rate Override	0~150%
12.	Jog Override	0~100%
13.	Automatic Corner Override	G62.
14.	Feed Stop	Std.
15.	AI contour control (AICC, G05.1) (in total)	40 blocks (0i)
16.	AI nano contour control (G05.1) (in total)	180 blocks (18i)
17.	AICC-2 + High speed processing (G05.1) (in total)	600 blocks (31i)
18.	Jerk Control	Std. (18i/31i)
19.	Rigid Tapping Bell–Shaped Acc./Deceleration	Std.
20.	Feed rate clamp by arc radius (G02/G03)	Std.
Program Input:		
1.	EIA / ISO Automatic Recognition	Std.
2.	Label Skip	Std.
3.	Parity Check	Std.
4.	Control In / Out	Std.
5.	Optional Block Skip	1
6.	Max. Programmable Dimension	±8-Digit
7.	Program Number	O4-Digit
8.	Sequence Number	N5-Digit
9.	Absolute / Incremental Programming	G90 / G91
10.	(Pocket Calculator Type) Decimal Point Programming	Std.
11.	Input Unit 10 Time Multiply	Std.
12.	Plane Selection	G17, G18, G19
13.	Rotary Axis Designation	Std.
14.	Rotary Axis Roll-Over Function	Std.
15.	Polar coordinate command	G16.
16.	Coordinate System Setting	Std.
17.	Automatic Coordinate System Setting	Std.
18.	Work Piece Coordinate System	G52, G53, G54~G59
19.	Addition of Work Piece Coordinate System Pair	48 Pairs
20.	Manual Absolute On And Off	Std.
21.	Optional Chamfering / Corner R	Std.
22.	Programmable Data Input	G10
23.	Sub Program Call	4 Folds Nested
24.	Custom Macro B	Std.
25.	Addition of Custom Macro Common Variables	#100~#199, #500~#999
26.	Canned Cycles For Milling	G73 / G74 / G76, G80-G89, G98 / G99
27.	Small hole peck drilling cycle	G83
28.	Circular Interpolation By R Programming	Std.
29.	Program Format	FANUC Std. Format
30.	Program Stop / Program End	M00 / M01 / M02 / M30
31.	Reset	Std.
32.	Scaling	G51
33.	Coordinate System Rotation	G68
Auxiliary Spindle Speed Function:		
1.	Auxiliary Function Lock	Std.
2.	High Speed M / S / T Interface	Std.
3.	Spindle Speed Function	Std.
4.	Spindle Override	50~120%
5.	1st Spindle Orientation	Std.
6.	M Code Function	M3 Digit
7.	S Code Function	S5 Digit
8.	T Code Function	T2 Digit
9.	Rigid Tapping	Std.
Tool Function & Tool Compensation:		
1.	Tool Function	T8 digit
2.	Tool Offset Pairs	±6-digit, 400 (0i), 999 (18i/31i)
3.	Tool Offset Memory C	STD (D/H codes are separated)
4.	Tool Length Compensation	G43-G44, G45-G48, G49
5.	Cutting Compensation C	Std.
Accuracy Compensation:		
1.	Backlash Compensation	Rapid Traverse / Cutting Feed
2.	Stored Pitch Error Compensation	Std.
Edit Operation:		
1.	Part Program Storage Length (In Total)	1280m (512KB) (0i), 2560m (18i/31i)
2.	Number Of Registered Programs (In Total)	400 (0i), 1000 (18i/31i)
3.	Part Program Editing / Protect	Std.
4.	Background Editing	Std.
5.	Machining Time Stamp	Std. (Only available on 18i-M)
Setting And Display:		
1.	Status Display	Std.
2.	Clock Function	Std.
3.	Current Position Display	Std.
4.	Program Display	Program Name 31 Characters
5.	Parameter Setting And Display	Std.
6.	Self Diagnosis Function	Std.
7.	Alarm Display	Std.
8.	Alarm History Display	25
9.	Operation History Display	Std.
10.	Help Function	Std.
11.	Run Hour And Parts Count Display	Std.
12.	Actual Cutting Feedrate Display	Std.
13.	Display Of Spindle Speed And T Code At All Screens	Std.
14.	Graphic Function	Std.
15.	Dynamic Graphic Display	Std.
16.	Servo Setting Screen	Std.
17.	Spindle Setting Screen	Std.
18.	Display Of Hardware And Software Configuration	Std.
19.	Multi-Language Display	Std.
20.	Data Protection Key	Std.
21.	Erase CRT Screen Display	Std.
22.	Machining Condition Selecting Screen	Std.
23.	Color LCD / MDI	10.4" (0i/18i/31i)
Data Input / Output:		
1.	Reader / Puncher Interface	RS-232 Interface
2.	External Work Piece Number Search	9999
3.	Memory Card Interface	Std.
4.	Embedded Ethernet (10Mbps)	Std.

Options:

With Hardware Included:		0i-MD	18i-MB	31i-B
1.	Conversational programming (Manual Guide i)	Std.	Std.	Std.
2.	Conversational programming (Super Cap i)	N.A.	□	N.A.
3.	Data server (with PCB and CF card 1GB)	□	Std.	Std.
4.	Fast Ethernet (100Mbps, available in Data server)	□	Std.	Std.
5.	Tool life management (2 buttons on control panel)	□	□	□
6.	Part Program Storage Length 5120m (2MB in total)	□	□	□
7.	Part Program Storage Length 8MB in total	N.A.	N.A.	□
8.	Program restart	□	□	□
9.	Optional block skip 9 blocks	□	□	□
10.	High Precision Contour Control (HPnanoCC, with RISC board)*1	N.A.	□ (600)	N.A.
11.	Profibus	□	□	□
12.	USB Device	□	N.A.	Std.
13.	5-axis simultaneous control	N.A.	N.A.	□ (31i-B5)
Without Hardware Included:				
14.	AI contour control II (AICC-2, G05.1, 200 blocks) *1	□	N.A.	Std.
15.	Look ahead block expansion (1000 blocks in total) *1	N.A.	N.A.	□
16.	Tool load monitoring (with Victor own PLC)	□	□	□
17.	Programmable mirror image (G50.1)	□	□	□
18.	Bi-directional Pitch Error Compensation	□	□	□
19.	Addition of tool pairs for tool life management 512 sets	N.A.	□	□
20.	Cylindrical interpolation (G7.1) (used on 4th-axis)	Std.	N.A.	□
21.	Interruption type custom macro	N.A.	□	□
22.	Addition of work-piece coordinate systems 300 sets	N.A.	□	□
23.	Exponential interpolation (G2.3)	N.A.	□	□
24.	Smooth interpolation	N.A.	□	□
25.	Spiral/conical interpolation	N.A.	□	□
26.	Polar coordinate interpolation	N.A.	□	□
27.	Floating reference position return	N.A.	□	□
28.	Hypothetical axis interpolation (G07)	N.A.	□	□
29.	Tool retract and return (G10.6 with Victor own PLC)	N.A.	□	□
30.	NURBS interpolation (only avail. in HPCC/RISC)	N.A.	□	□

*1. Block addressing time:
- 2ms for AI nano CC (max. cutting feed 30m/min. 18i-B), and AICC-2 (0i-D/31i-B)
- 1ms for HPCC (max. cutting feed 60 m/min) (18i-B)
- 0.4ms for AI HPCC and AI nano HPCC (150m/min) (18i-B) and AICC-2+ High speed processing (31i-B)

Machine Specification

Item \ model		Units	Vcenter-205
Travel	X axis travel	mm	2050
	Y axis travel	mm	550
	Z axis travel	mm	560
Distance	Spindle center to column	mm	638
	Spindle nose to table surface	mm	180 ~ 740
Table	Table work area	mm	2500 x 550
	Dimension of T-slot	mm	5 x 18 x 100
	Max. table load	kg	1200
Spindle	Spindle taper		BT-40
	Spindle motor - cont / 30 / 10 min	kW	7.5 / 11 / 15 (opt. 15 / 18.5 / -)
	Spindle speed	rpm	12000
Feed rate	Rapid feed rate - X/Y/Z	m/min	30 / 30 / 30
	Axis feed motor - X/Y/Z	kW	4 / 3 / 4
	Cutting feedrate by table	m/min	7.5 (opt. 10)
	X ballscrew diameter	mm	50
	Y ballscrew diameter	mm	40
	Z ballscrew diameter	mm	40
	Linear guide width (X/Y/Z)	mm	45 / 45 / 45
Tools	Max. tool length	mm	350
	Max. tool weight	kg	8
	Magazine capacity		24 disc (opt. 32, 40)
	Max. tool diameter (without adjacent tools)	mm	ø80 (ø127)
	Tool exchange time	sec.	2.9 (T-T), 7.2 (C-C)
	Pull stud angle	deg.	15
	Tool selection method		Random
Machine	Power requirement	kVA	40
	Air pressure requirement	kg/cm²	5.5 ~ 6.5
	Coolant tank capacity	L.	600
	Std. NC controller		Fanuc 0i-MD
	Floor space requirement	mm	5300 x 3430
	Max. machine height	mm	3045
	Machine weight	kg	9050

Standard accessories

- Chip conveyor with cart
- Air dryer for DCS spindle
- Central partition system
- Fully enclosed splash guard
- Rigid tapping
- Remote MPG
- Hand tools and toolbox
- T nuts for table slot
- Built-in work light
- Auto power off system
- Leveling blocks
- Air conditioner for electric cabinet
- Moving CRT

Optional accessories

- Spindle oil cooler
- High-powered spindle motor
- Coolant through spindle
- Linear scale (X-axis)
- Auto tool length measurement
- Stop block for special tool
- 4th/5th axis interface
- Hydraulic interface
- Rotary tables
- 32, 40 tool magazine
- Workpiece measurement
- Table shower system
- Auto door
- Fanuc 18i/31i or Heidenhain iTNC-530 control
- SK-40 / CAT-40 tooling system
- Non-central partition system
- 2-door design

Machine Layout (excl. transformer)

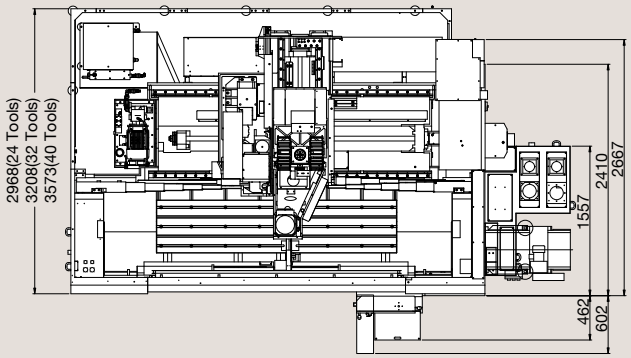

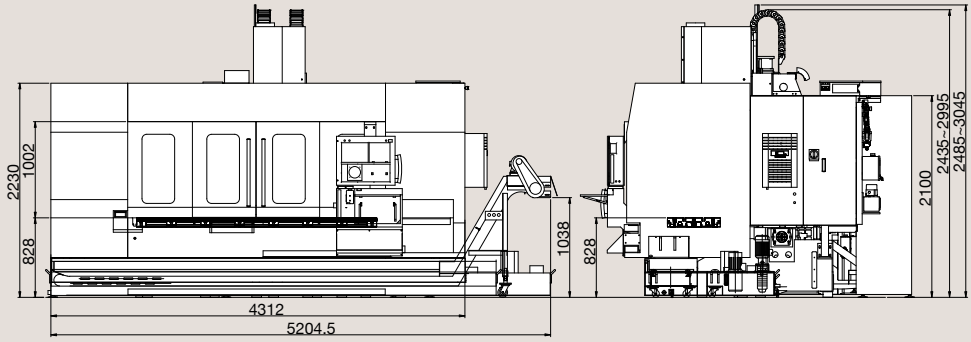

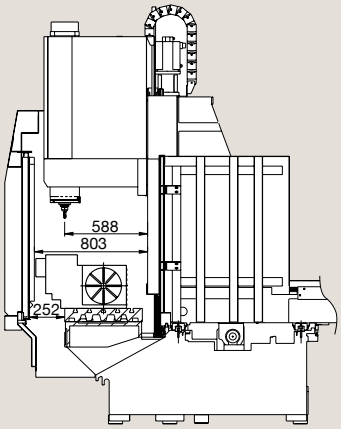

Rotary table diameter 250mm

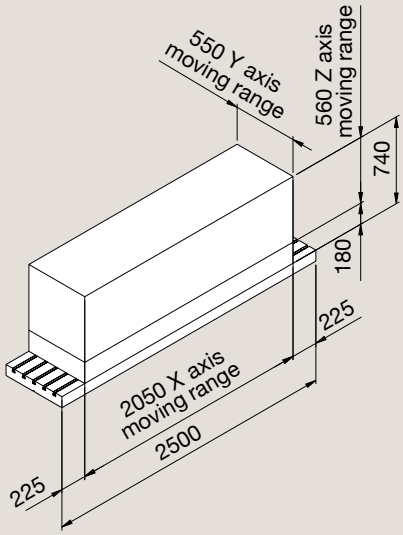

Machine layout

BT 40

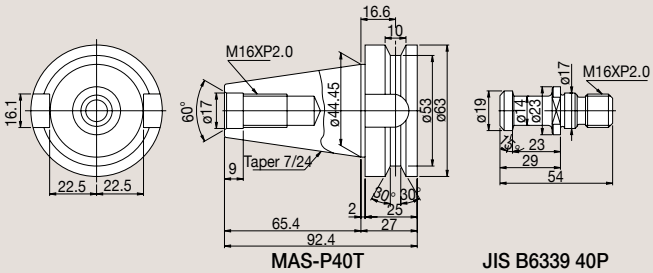

MAS-P40T JIS B6339 40P

SK 40

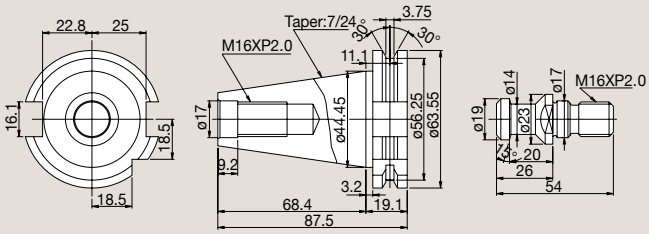

DIN69871A-SK40 DIN69872A

VictorTaichung Taichung, the home of Machine Tool Manufacturing

Quality Meehanite Castings-The backbone of VICTOR TAICHUNG machines.

Being both ISO 9001 approved and a Meehanite cast member, our foundry produces over 1000 tons of castings a month for both our own use and export to Japan.

Modern machining facilities-65% of components manufactured in house.

To ensure greater control over the quality of our machined parts, VICTOR TAICHUNG has introduced 3 giant 5-side machining centers, 1 CIM line for sheet metal manufacturing and 2 complete FMS lines developed in house.

Overseas subsidiaries solely dedicated to service of our own products.

To ensure a market for our products, VICTOR TAICHUNG has invested considerably in setting up a global distribution network. As well as numerous agents around the world, VICTOR TAICHUNG has 8 overseas subsidiaries in USA, England, France, Germany, South Africa, Malaysia, Thailand and China to provide our customers efficient after-sales service and technical supports.

Vcenter-X300

Vcenter-A85/A110

Vcenter-H500/H500HS

VictorTaichung profile:
Sales turnover: USD 230 mil's (in 2011)*
No. of employees: 1091
*Exchange rate: 1 USD=30 TWD.

HTL VTL VMC HMC XMT PIM

12080102 Macis TEL: 04-24733326

THE VICTOR-TAICHUNG COMPANIES

TAIWAN
http://www.or.com.tw
E-mail :info@mail.or.com.tw
☐ Victor Taichung Machinery Works Co., Ltd.
Headquarters:
266, Sec.3 Taichung Kan Rd.
Taichung,Taiwan, R.O.C.
TEL : 886-4-23592101
FAX : 886-4-23592943
Overseas Marketing Division:
TEL : 886-4-23580701
FAX : 886-4-23584541

UK
☐ Victor CNC (UK) Ltd.
TEL : 44-1-706-648485
FAX : 44-1-706-648483

FRANCE
☐ Victor France
TEL : 33-1-64772000
FAX : 33-1-64772063

GERMANY
☐ Victor GmbH
TEL : 49-2261-478434
FAX : 49-2261-478327

MALAYSIA
☐ Victor Machinery (M) SDN. BHD.
TEL : 60-3-56337180
FAX : 60-3-56337191

THAILAND
☐ Victor (Thailand) Co. Ltd.
TEL : 66-2-9263735
FAX : 66-2-9032373

INDONESIA
☐ PT. Victor Machinery Indonesia
TEL : +62-21-88958504
FAX : +62-21-88958513

USA
☐ Fortune International Inc.
TEL : 1-732-2140700
FAX : 1-732-2140701

SOUTH AFRICA
☐ Victor Fortune (PTY) Ltd.
TEL : 27-11-3923800
FAX : 27-11-3923899

CHINA
☐ Jianrong Precision Machinery (Shanghai)
TEL : 86-21-59768018
FAX : 86-21-59768008

VictorTaichung was also marketed under the brand names VICTOR (outside North America) and FORTUNE VMCHFGE12EC